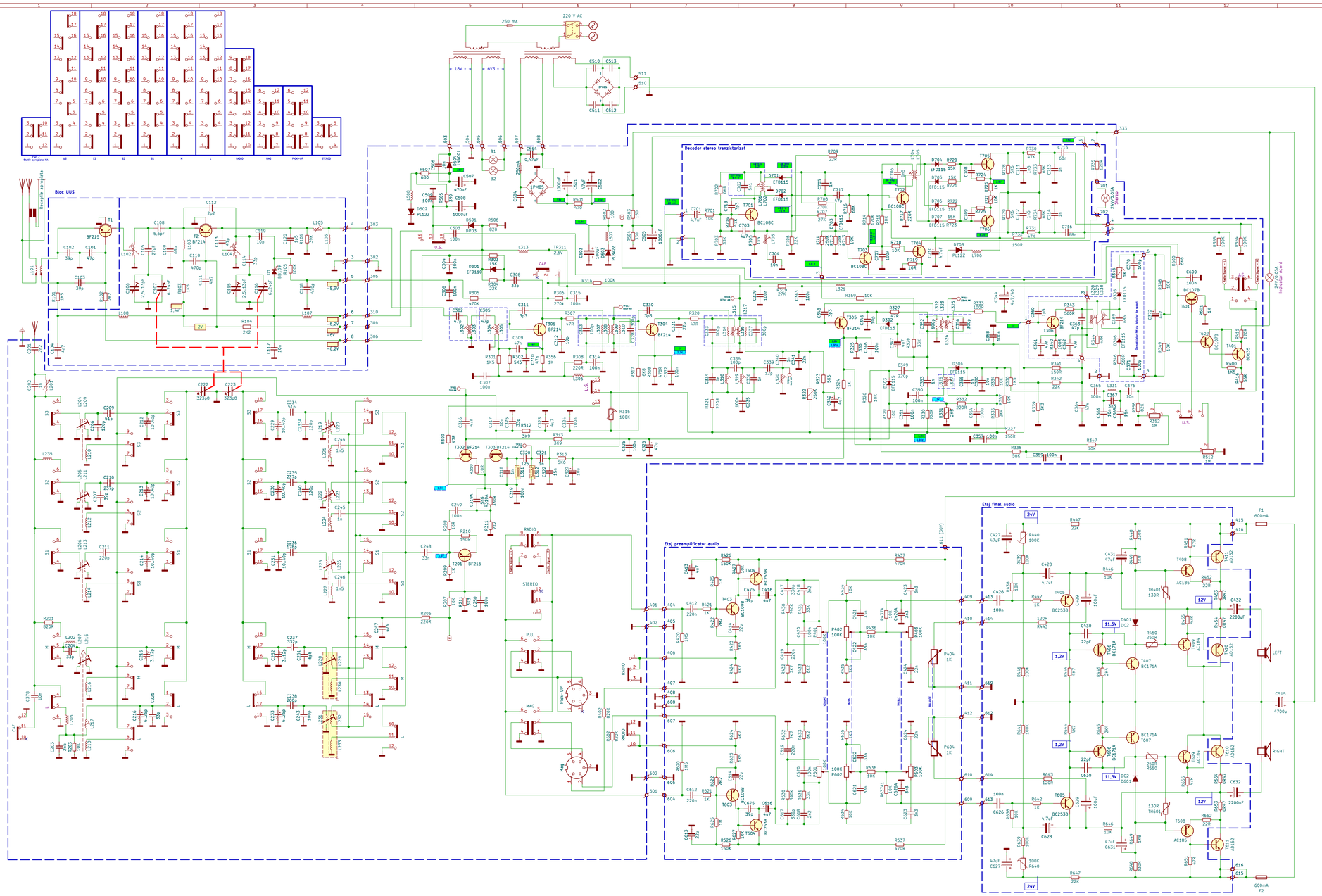

Created by Wilhelm Tomasi
Tehnoton
Sheet: /
File: Bucur.kicad_sch

Title: Radio Bucur

Size: A1	Date: 2026-04-15	Rev:
KICad E.D.A. 9.0.7		Id: 1/1